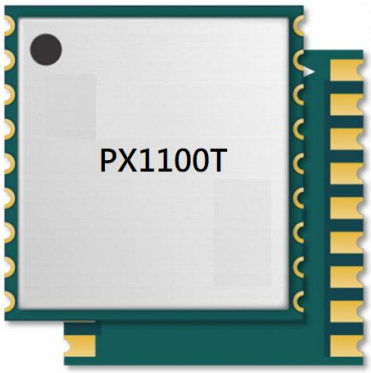

L1 Quad Constellation Precision Timing Mode GNSS Receiver Module

Features

- 230 acquisition/tracking channels
- Support global GPS, Beidou, Galileo, GLONASS
- Supports regional QZSS, SBAS
- 16 million time-frequency hypothesis testing per sec
- -148dBm cold start sensitivity
- -165dBm tracking sensitivity
- 29 second cold start TTFF
- 3.5 second TTFF with AGPS
- 1 second hot start
- 2.0m CEP accuracy
- Multipath detection and suppression
- Jamming detection and mitigation
- 5nsec (1-sigma) timing accuracy
- Position hold mode for GNSS timing operation
- 1PPS generation with 1 satellite in view
- Works with active and passive antenna
- On board active antenna short protection
- On board active antenna detection
- Complete receiver in 10.1mm x 9.7mm size
- Operating temperature -40 ~ +85ºC
- Pb-free RoHS compliant

PX1100T is a single chip, quad GNSS receiver targeting precision timing applications. The PX1100T is capable of using GPS, GLONASS, Galileo, Beidou, QZSS, and SBAS signal to provide precise 1PPS signal generation in a small SMD module. It is fully autonomous such that once power is applied, the receiver automatically searches, acquires and tracks satellite signals. When a sufficient number of satellites are tracked with valid measurements, the receiver produces position, velocity, and date/time output along with 1PPS signal.

Global quad-constellation GNSS signal receiving capability enables using greater number of satellite signal than GPS or GPS/GLONASS receivers. The increased satellite number offers superior performance in challenging urban canyon environments.

Self-survey and position-hold operation reduces timing jitter and enables synchronization to be maintained down to using a single satellite.

Single-chip Phoenix positioning engine is inside the receiver module. It features high sensitivity and fast TTFF. The PX1100T can acquire, track, and get position fix autonomously in difficult weak signal environment. Its high tracking sensitivity allows continuous operation in nearly all outdoor application environments. The high performance signal parameter search engine is capable of testing 16 million time-frequency hypotheses per second, offering fast signal acquisition and TTFF speed.

Application

- Timing reference

TECHNICAL SPECIFICATIONS

Receiver Type	L1 frequency, 230-channel Phoenix engine
Supported Satellites	GPS, Beidou, Galileo, GLONASS, QZSS
Augmentation System	QZSS, WAAS, EGNOS, MSAS, GAGAN
Accuracy	Position 2.0m CEP Velocity 0.1m/sec Time 5ns (1-sigma)
Startup Time	1 / 28 / 29 second hot / warm / cold start under open sky average
Reacquisition	1s
Sensitivity	-148dBm cold-start* -160dBm re-acquisition* -165dBm tracking*
Multi-path Mitigation	Advanced multi-path detection and suppression
Update Rate	1 / 2 / 4 / 5 / 8 / 10 / 20 / 25 Hz (default 1Hz)
Dynamics	4G (39.2m/sec^2)
Operational Limits	Altitude < 80,000m and velocity < 515m/s
Serial Interface	3.3V LVTTL level
Protocol	NMEA-0183 V4.1, SkyTraq binary, 115200 baud, 8, N, 1
Datum	Default WGS-84, User definable
Input Voltage	3.3V DC +/-10%
Current Consumption	Acquisition 75mA @ 3.3V, Tracking 65mA @ 3.3V
Dimension	10.1mm L x 9.7mm W x 2.9mm H
Weight:	1g
Operating Temperature	-40°C ~ +85°C
Storage Temperature	-55 ~ +100°C
Humidity	5% ~ 95%

* used with good quality external LNA

BLOCK DIAGRAM

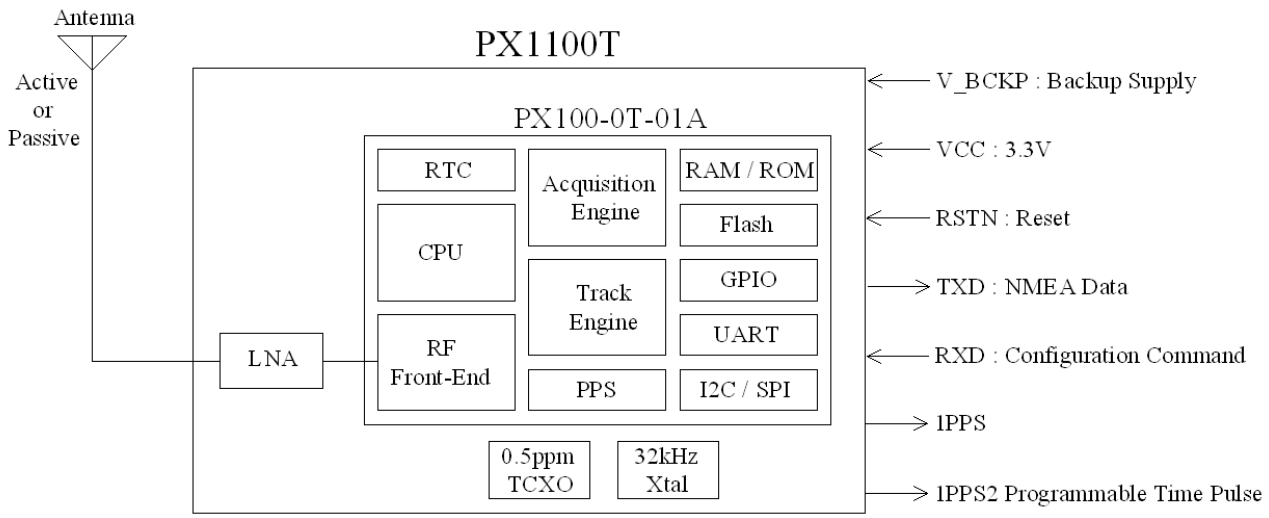

The PX1100T is a L1 quad constellation capable global navigation satellite timing mode receiver in a small surface mount package. It is based on the latest single-chip Phoenix GNSS receiver technology, providing high performance signal acquisition and tracking. The simple UART serial interface and the standard NMEA-0183 protocol make usage of PX1100T very easy and straightforward.

The PX1100T module performs all the necessary system initialization, signal acquisition, signal tracking, data demodulation, and calculation of navigation solution autonomously.

OPERATION

When PX1100T is turned on, it automatically begin to acquire and track GNSS signal. After valid ephemeris data is collected for each tracked satellite signal and ready for position fix, it performs self-survey of its location in Survey Mode. After 2000 position fixes (configurable) the PX1100T automatically enters Static Mode, a clock over-determined time-only mode.

Satellites above elevation mask and signal level above CNR mask are used for position fix. Default elevation mask is 5 degrees and CNR mask is 0.

PX1100T has Survey Mode, Static Mode, or PVT Mode.

Upon power on, the PX1100T performs 2000 point position fix self-survey. The number of points used for self-survey may be changed using binary command 0x43. After self-survey is completed, the receiver enters Static Mode.

Static Mode is used in static timing application. It is entered after the receiver self-surveyed its static reference position, or by user input. The over-determined clock solution is checked against TRAIM algorithm to remove faulty satellite measurement from the solution. In this mode the receiver will no longer update its position or velocity, only solving for receiver clock bias and bias rate to maintain the 1PPS output.

The PVT mode is for navigation type of application, less used with timing application. In this mode, TRAIM and single-satellite 1PPS generation is not supported.

1PPS QUANTIZATION ERROR

PX1100T uses 125MHz clock for 1PPS generation, which has period of 8nsec. By steering 1PPS output rising edge closest to UTC second, there remains a quantization error of half clock period, +/-4nsec. The amount of quantization error is reported by the PX1100T using SkyTraq proprietary NMEA message $PSTI,00; this information can be used to reduce the effective amount of jitter on 1PPS output.

PINOUT DESCRIPTION

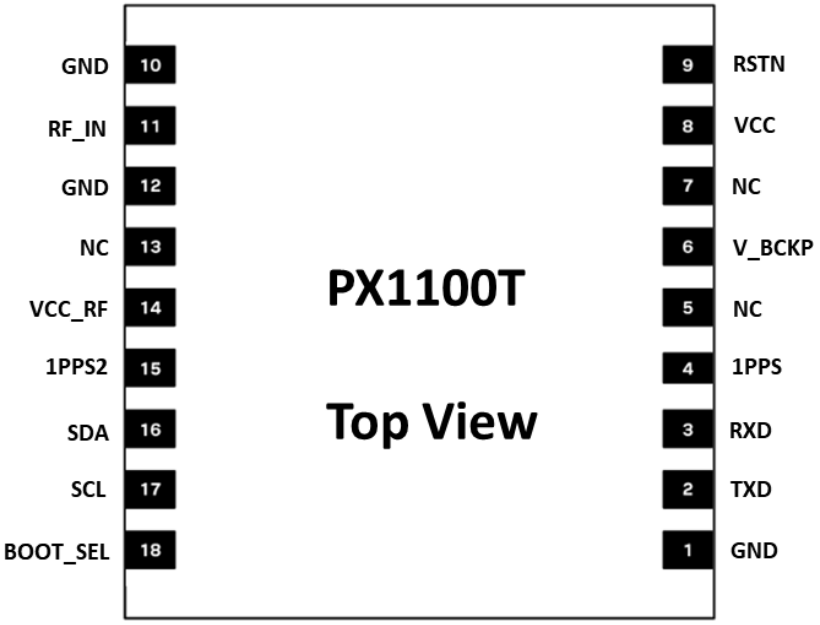

Pin No.	Name	Description
1	GND	Ground
2	TXD	UART serial data output, 3.3V LVTTL. One full-duplex asynchronous serial UART port is implemented. This UART output is normally used for sending position, time and velocity information from the receiver in NMEA-0183 format. When idle, this pin output HIGH.
3	RXD	UART serial data input, 3.3V LVTTL. One full-duplex asynchronous serial UART port is implemented. This UART input is normally for sending commands or information to the receiver in SkyTraq binary protocol. In the idle condition, this pin should be driven HIGH. If the driving circuitry is powered independently of PX1100T, ensure that this pin is not driven to HIGH when primary power to PX1100T is removed, or a 10K-ohm series resistor can be added to minimize leakage current from application to the powered off module.
4	1PPS	One-pulse-per-second (1PPS) time mark output, 3.3V LVTTL. The rising edge synchronized to UTC second when getting 3D position fix. The pulse duration is about 100msec at rate of 1 Hz.
5	NC	No connection, empty pin
6	V_BCKP	Backup supply voltage for internal RTC and backup SRAM, 1.3V ~ 3.6V. V_BCKP must be applied whenever VCC is applied. This pin should be powered continuously to minimize the startup time. If VCC and V_BCKP are both removed, the receiver will be in factory default mode upon power up, all user configuration set is lost. For applications the does not care cold starting every time, this pin can be connect to VCC.
7	NC	No connection, empty pin
8	VCC	Main power supply, 3.3V +/- 10%
9	RSTN	External active-low reset input to the baseband. Only needed when power supply rise time is very slow or software controlled reset is desired.
10	GND	Ground
11	RF_IN	RF signal input, connect to L1 GNSS antenna. 3.2V active antenna bias on RF_IN.

12	GND	Ground
13	NC	No connection, empty pin
14	VCC_RF	Output voltage RF section
15	1PPS2	Programmable 1PPS phased-locked frequency output, 1Hz ~ 19.2MHz.
16	SDA	Not used. Leave unconnected
17	SCL	Not used. Leave unconnected
18	BOOT_SEL	No connection for normal use. Pull-low for loading firmware into empty or corrupted Flash memory from ROM mode.

ELECTRICAL SPECIFICATIONS

ABSOLUTE MAXIMUM RATINGS

Parameter	Minimum	Maximum	Condition
Supply Voltage (VCC)	-0.5	3.6	Volt
Backup Battery Voltage (V_BCKP)	-0.5	3.6	Volt
Input Pin Voltage	-0.5	VCC+0.5	Volt
Input Power at RF_IN		+5	dBm
Storage Temperature	-40	+100	degC

OPERATING CONDITIONS

Parameter	Min	Typ	Max	Unit
Supply Voltage (VCC)	3	3.3	3.6	Volt
Acquisition Current (exclude active antenna current)		75		mA
Tracking Current (exclude active antenna current)		65		mA
Backup Voltage (V_BCKP)	1.3		3.6	Volt
Backup Current (VCC voltage applied)		54		uA
Backup Current (VCC voltage off)		13		uA
Output Low Voltage			0.4	Volt
Output HIGH Voltage	2.4			Volt
Input LOW Voltage			0.8	Volt
Input HIGH Voltage	2			Volt
Input LOW Current	-10		10	uA
Input HIGH Current	-10		10	uA
RF Input Impedance (RF_IN)		50		Ohm

APPLICATION CIRCUIT

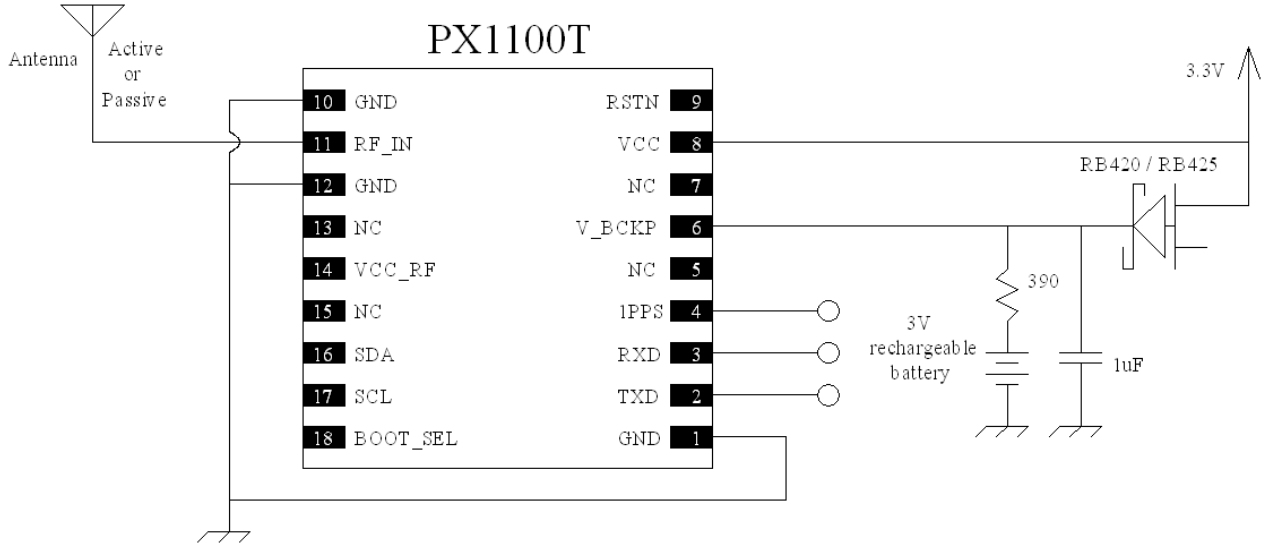

When PX1100T has previously been used within 2 hour, for faster time to first fix powering up without needing to decoded ephemeris data from signal, V_BCKP should be connected to non-volatile supply; above figure with V_BCKP connected to rechargeable battery is an example implementation. If cold starting every time powering up is not an issue, V_BCKP can be connect to VCC.

MECHANICAL DIMENSIONS

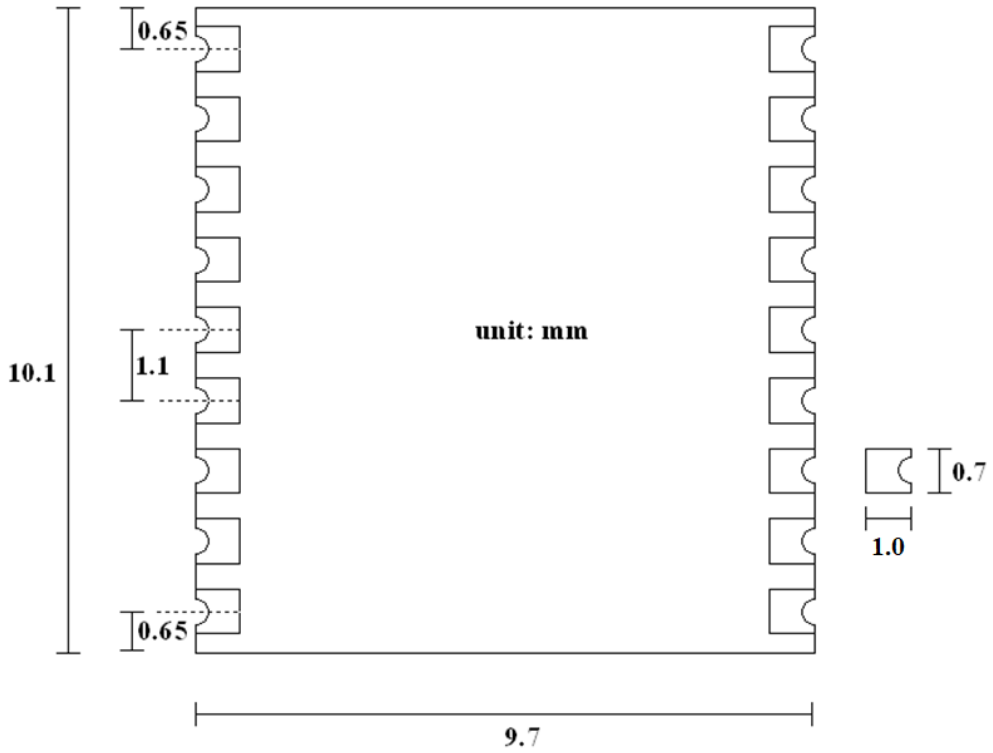

RECOMMANDED FOOTPRINT

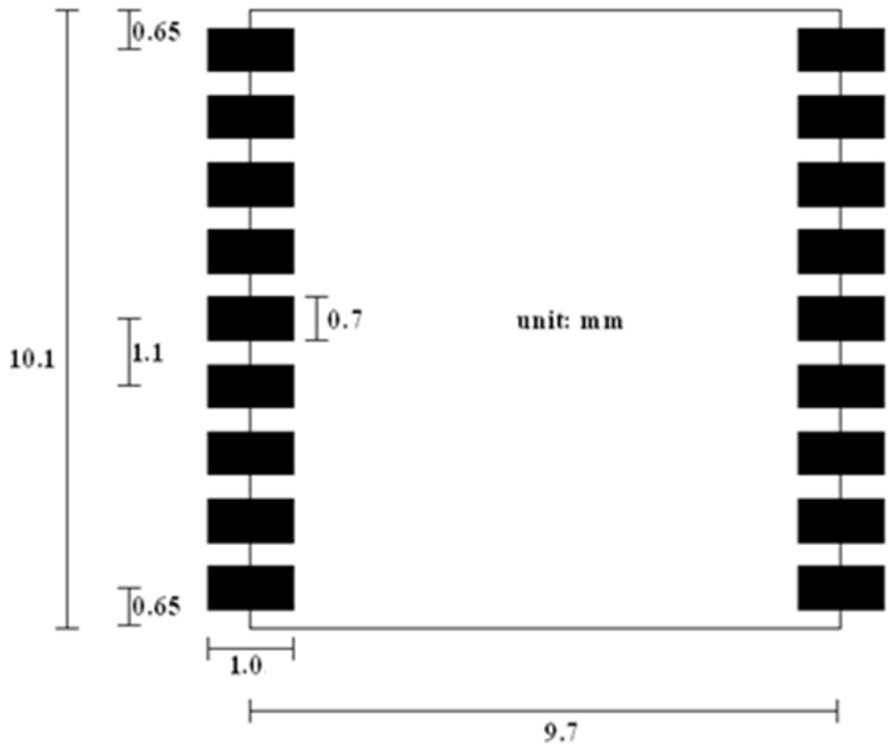

RECOMMANDED REFLOW PROFILE

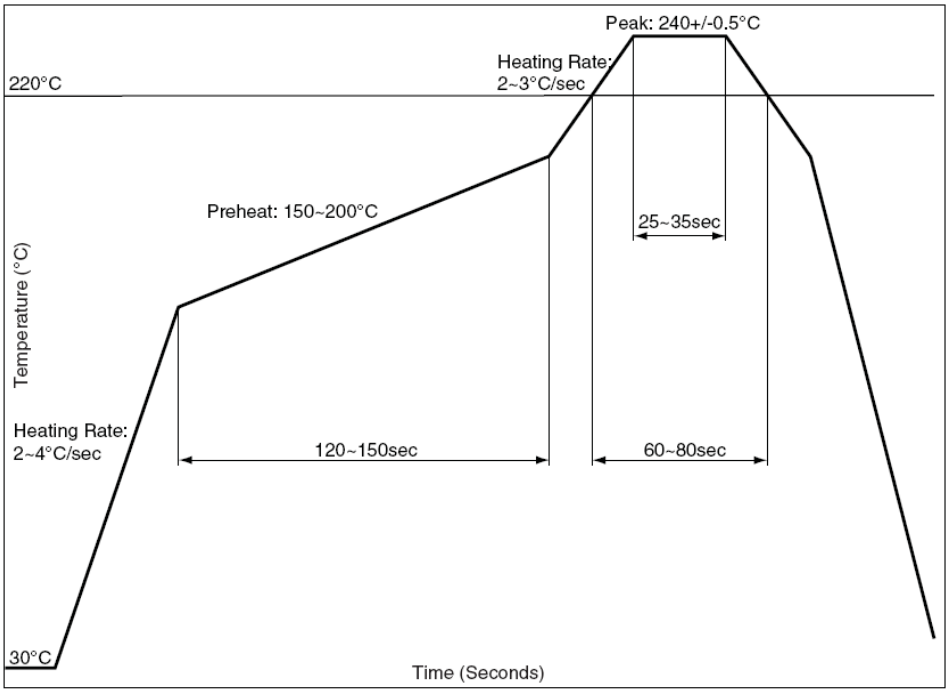

The reflow profile shown above should not be exceeded, since excessive temperatures or transport times during reflow can damage the module. Cooling temperature fall rate: max 3°C / sec

ANTENNA SECTION CONSIDERATION

The PX1100T can be used with active antenna or passive antenna. Below are possible design options.

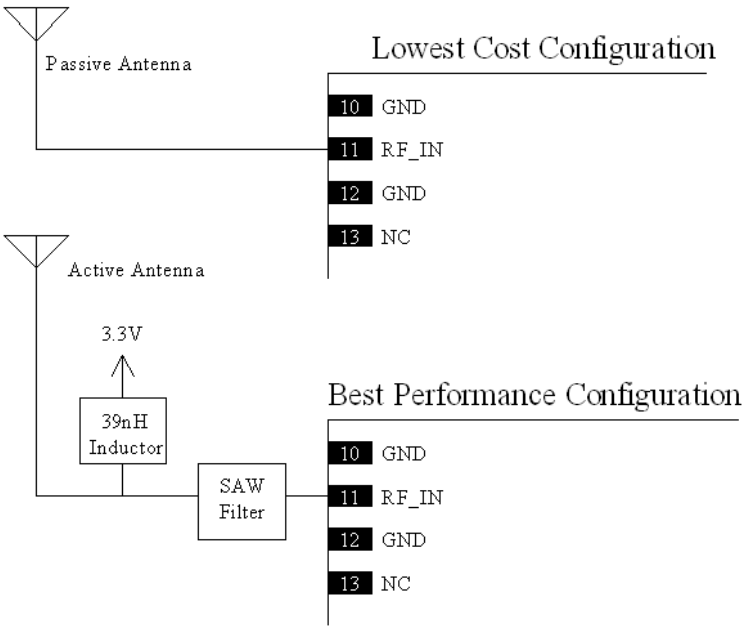

Passive ceramic patch antenna is low-cost and provides good sensitivity. 50-ohm output larger size ceramic patch antenna with higher antenna gain can be connected directly to RF input of the module. Usually the ceramic patch antenna and PX1100T are mounted on opposite side of the PCB to reduce possibility of picking up digital noise. To improve signal reception performance, use larger ground plane under the patch antenna if possible; larger the ground plane, larger the overall antenna gain. The center frequency of the ceramic patch antenna changes with ground plane size. For optimal L1 quad constellation signal reception, the frequency bandwidth of the antenna needs to cover 1559MHz ~ 1605MHz when mounted on the PCB. It is usual to ask the ceramic patch antenna vendor to select or tune a patch antenna that best matches the customer PCB.

Active antenna is essentially a passive antenna with built-in LNA and a coaxial cable to connect the antenna to the module. It has the flexibility of being located remotely from the module, but requires antenna power. Active antenna usually costs more than passive patch antenna, but the performance in low signal environments is usually better. Active antenna with one stage LNA gain of 10 ~ 20dB and noise figure less than 1.5dB can be used with PX1100T.

Antenna Type	Passive	Active
L1 GNSS Frequency (MHz)	1558 ~ 1606	1558 ~ 1606
VSWR	< 2 (typical)	< 2 (typical)
Polarization	RHCP	RHCP
Antenna Gain	> 0dBi	> -2dBi
LNA Gain		17dB (typical)
Noise Figure		< 1.5dB
Total Gain		> 15dB

POWER SUPPLY REQUIREMENT

PX1100T requires a stable power supply, avoid ripple on VCC pin (<50mVpp). Power supply noise can affect the receiver's sensitivity. Bypass capacitors of 10uF and 0.1uF is recommended to be placed close to the module VCC pin; the values could be adjusted according to the amount and type of noise present on the supply line.

BACKUP SUPPLY

The purpose of backup supply voltage pin (V_BCKP) is to keep the SRAM memory and the RTC powered when the module is powered down. This enables the module to have a faster time-to-first-fix when the module is powered on again. The backup current drain is less than 15µA. In normal powered on state, the internal processor access the SRAM and current drain is higher in active mode

1PPS OUTPUT

A 1 pulse per second signal (100msec HIGH duration) is generated on 1PPS pin when the receiver has 3D position fix using 4 or more satellites. The rising edge of the pulse is aligned with UTC second, with accuracy of about 5nsec (1-sigma). It outputs constant LOW when no position fix is available initially.

LAYOUT GUIDELINES

Separate RF and digital circuits into different PCB regions.

It is necessary to maintain 50-ohm impedance throughout the entire RF signal path. Try keeping the RF signal path as short as possible.

Do not route the RF signal line near noisy sources such as digital signals, oscillators, switching power supplies, or other RF transmitting circuit. Do not route the RF signal under or over any other components (including PX1100T), or other signal traces. Do not route the RF signal path on an inner layer of a multi-layer PCB to minimize signal loss.

Avoid sharp bends for RF signal path. Make two 45-deg bends or a circular bend instead of a single 90-degree bend if needed.

Avoid vias with RF signal path whenever possible. Every via adds inductive impedance. Vias are acceptable for connecting the RF grounds between different layers. Each of the module's ground pins should have short trace tying immediately to the ground plane below through a via.

The bypass capacitors should be low ESR ceramic types and located directly adjacent to the pin they are for.

HANDLING GUIDELINE

The PX1100T modules are rated MSL4, must be used for SMT reflow mounting within 72 hours after taken out from the vacuumed ESD-protective moisture barrier bag in factory condition < 30degC / 60% RH. If this floor life time is exceeded, or if the received ESD-protective moisture barrier bag is not in vacuumed state, then the device need to be pre-baked before SMT reflow process. Baking is to be done at 85degC for 8 to 12 hours. Once baked, floor life counting begins from 0, and has 72 hours of floor life at factory condition < 30degC / 60% RH. Do not bake the module in tape-on-reel form; for baking, place parts individually onto oven tray

PX1100T module is ESD sensitive device and should be handled with care.

NMEA Output Description

The output protocol supports NMEA-0183 standard. The implemented messages include GGA, GLL, GSA, GSV, VTG, RMC, and ZDA messages. The NMEA message output has the following sentence structure:

$aaccc,c–c*hh<CR><LF>

The detail of the sentence structure is explained in Table 1.

Table 1: The NMEA sentence structure

character	HEX	Description
“$”	24	Start of sentence.
Aaccc		Address field. “aa” is the talker identifier. “ccc” identifies the sentence type.
“,”	2C	Field delimiter.
C–c		Data sentence block.
“*”	2A	Checksum delimiter.
Hh		Checksum field.
<CR><LF>	0D0A	Ending of sentence. (carriage return, line feed)

Table 2: Overview of SkyTraq receiver’s NMEA messages

$GPGGA	Time, position, and fix related data of the GPS receiver.
$GNGLL	Position, time and fix status.
$GNGSA	Used to represent the ID’s of satellites which are used for position fix. When GPS satellites are used for position fix, $GNGSA sentence is output with system ID 1. When GLONASS satellites are used for position fix, $GNGSA sentence is output with system ID 2. When Galileo satellites are used for position fix, $GNGSA sentence is output with system ID 3. When BDS satellites are used for position fix, $GNGSA sentence is output with system ID 4.
$GPGSV **$GLGSV** **$GAGSV** **$GBGSV**	Satellite information about elevation, azimuth and CNR, $GPGSV is used for GPS satellites, while $GLGSV is used for GLONASS satellites, while $GAGSV is used for GALILEO satellites, while $GBGSV is used for BEIDOU satellites.
$GNRMC	Time, date, position, course and speed data.
$GNVTG	Course and speed relative to the ground.
$GNZDA	UTC, day, month and year and time zone.

The formats of the supported NMEA messages are described as follows:

GGA – Global Positioning System Fix Data
Time, position and fix related data for a GPS receiver.

Structure:
$GPGGA,hhmmss.sss,ddmm.mmmmm,a,dddmm.mmmmm,a,x,xx,x.x,x.x,M,x.x,M,x.x,xxxx*hh<CR><LF>
1 2 3 4 5 6 7 8 9 10 11 12 13

Example:
$GNGGA,052315.000,2447.09094,N,12100.52369,E,2,12,0.6,97.9,M,19.6,M,,0000*75<CR><LF>

Field	Name	Example	Description
1	UTC Time	025315.000	UTC of position in hhmmss.sss format, (000000.000 ~ 235959.999)
2	Latitude	2447.09094	Latitude in ddmm.mmmm mformat Leading zeros transmitted
3	N/S Indicator	N	Latitude hemisphere indicator, 'N' = North, 'S' = South
4	Longitude	12100.52369	Longitude in dddmm.mmmmm format Leading zeros transmitted
5	E/W Indicator	E	Longitude hemisphere indicator, 'E' = East, 'W' = West
6	Quality Indicator	2	GPS quality indicator 0: position fix unavailable 1: valid position fix, SPS mode 2: valid position fix, differential GPS mode 3: GPS PPS Mode, fix valid 4: Real Time Kinematic. System used in RTK mode with fixed integers 5: Float RTK. Satellite system used in RTK mode., floating integers 6: Estimated (dead reckoning) Mode 7: Manual Input Mode 8: Simulator Mode
7	Satellites Used	12	Number of satellites in use, (00 ~ 12)
8	HDOP	0.6	Horizontal dilution of precision, (0.0 ~ 99.9)
9	Altitude	97.9	mean sea level (geoid), (-9999.9 ~ 17999.9)
10	Geoidal Separation	19.6	Geoidal separation in meters
11	Age pf Differential GPS data		Age of Differential GPS data NULL when DGPS not used
12	DGPS Station ID	0000	Differential reference station ID, 0000 ~ 1023
13	Checksum	75	

GLL – Latitude/Longitude

Latitude and longitude of current position, time, and status.

Structure:

$GNGLL,ddmm.mmmmm,a,dddmm.mmmmm,a,hhmmss.sss,A,a*hh<CR><LF>

1 2 3 4 5 6 7 8

Example:

$GNGLL,2447.09094,N, 12100.52369,E, 052315.000,A,D*4A<CR><LF>

Field	Name	Example	Description
1	Latitude	2447.09094	Latitude in ddmm.mmmmm format Leading zeros transmitted
2	N/S Indicator	N	Latitude hemisphere indicator 'N' = North 'S' = South
3	Longitude	12100.52369	Longitude in dddmm.mmmmm format Leading zeros transmitted
4	E/W Indicator	E	Longitude hemisphere indicator 'E' = East 'W' = West
5	UTC Time	052315.000	UTC time in hhmmss.sss format (000000.000 ~ 235959.999)
6	Status	A	Status, 'A' = Data valid, 'V' = Data not valid
7	Mode Indicator	D	Mode indicator 'A' = Autonomous mode 'D' = Differential mode 'E' = Estimated (dead reckoning) mode 'M' = Manual input mode 'S' = Simulator mode 'N' = Data not valid
8	Checksum	4A	

GSA – GNSS DOP and Active Satellites

GNSS receiver operating mode, satellites used in the navigation solution reported by the GGA or GNS sentence and DOP values.

Structure:

$GNGSA,A,x,xx,xx,xx,xx,xx,xx,xx,xx,xx,xx,xx,xx,x.x,x.x,x.x,x*hh<CR><LF>

1 2 3 3 3 3 3 3 3 3 3 3 3 3 4 5 6 7 8

Example:

$GNGSA,A,3,10,12,14,20,21,24,25,31,32,193,,,1.1,0.6,0.9,1*01<CR><LF>

$GNGSA,A,3,69,70,73,79,80,,,,,,,,1.1,0.6,0.9,2*3C<CR><LF>

$GNGSA,A,3,01,02,03,06,09,10,14,16,21,22,26,,1.1,0.6,0.9,4<CR><LF>

Field	Name	Example	Description
1	Mode	A	Mode 'M' = Manual, forced to operate in 2D or 3D mode 'A' = Automatic, allowed to automatically switch 2D/3D
2	Mode	3	Fix type 1 = Fix not available 2 = 2D 3 = 3D
3	Satellite used 1~12	10, 12, 14, 20, 21, 24, 25, 31, 32, 193	01 ~ 32 are for GPS; 33 ~ 64 are for WAAS (PRN minus 87); 193 ~ 197 are for QZSS; 65 ~ 88 are for GLONASS (GL PRN) ; 01 ~ 36 are for GALILEO (GA PRN); 01 ~ 37 are for BDS (BD PRN). GPS, GLONASS, GALILEO and BDS satellites are differentiated by the GNSS system ID in table 3. Maximally 12 satellites are included in each GSA sentence.
4	PDOP	1.1	Position dilution of precision (0.0 to 99.9)
5	HDOP	0.6	Horizontal dilution of precision (0.0 to 99.9)
6	VDOP	0.9	Vertical dilution of precision (0.0 to 99.9)
7	GNSS System ID	1	GNSS system ID* 1 = GPS 2 = GLONASS 3 = GALILEO 4 = BDS 5 = IRNSS
8	Checksum	01	

*GNSS System ID identifies the GNSS system ID according to Table 3.

Table 3: GNSS Identification Table for GSA, GSV

System	System ID (Talker)	Signal ID	Signal Name
GPS	1 (GP)	0	All signals
		1	L1 C/A
		2	L1 P(Y)
		3	L1C
		4	L2 P(Y)
		5	L2C-M
		6	L2C-L
		7	L5-I
		8	L5-Q
GLONASS	2 (GL)	0	All signals
		1	G1 C/A
		2	G1P
		3	G2 C/A
		4	GLONASS (M) G2P
GALILEO	3 (GA)	0	All signals
		1	E5a
		2	E5b
		3	E5 a+b
		4	E6-A
		5	E6-BC
		6	L1-A
		7	L1-BC
BDS	4 (BD)	0	All signals
		1	B1
		5	B2A
		B	B2
		8	B3
		3	B1C
IRNSS	6 (GI)	0	All signals
		1	L5

GSV – GNSS Satellites in View

Number of satellites (SV) in view, satellite ID numbers, elevation, azimuth, and SNR value. Four satellites maximum per transmission.

Structure:

$GPGSV,x,x,xx,xx,xx,xxx,xx,…,xx,xx,xxx,xx,x *hh<CR><LF>

1 2 3 4 5 6 7 4 5 6 7 8 9

Example:

$GPGSV,4,1,15,10,79,250,50,194,73,072,,193,69,127,45,25,64,114,46,1*67<CR><LF>
$GPGSV,4,2,15,20,54,175,45,32,44,334,46,41,39,242,43,12,36,055,46,1*68<CR><LF>
$GPGSV,4,3,15,31,32,256,45,14,25,310,39,24,15,049,38,21,07,191,35,1*61<CR><LF>
$GPGSV,4,4,15,15,04,106,18,29,03,144,,26,01,206,,1*56<CR><LF>
$GLGSV,2,1,06,80,77,332,44,69,55,098,49,70,46,347,43,73,29,221,45,1*79<CR><LF>
$GLGSV,2,2,06,79,25,026,42,71,01,325,,1*76<CR><LF>
$GBGSV,3,1,12,21,77,107,50,26,73,278,49,06,59,009,45,03,58,203,43,1*7D<CR><LF>
$GBGSV,3,2,12,16,58,002,47,07,55,180,,01,53,142,43,09,47,329,43,1*73<CR><LF>
$GBGSV,3,3,12,02,40,241,39,10,31,200,40,22,25,134,41,14,19,321,41,1*77<CR><LF>

Field	Name	Example	Description
1	Number of message	4	Total number of GSV messages to be transmitted (1-5)
2	Sequence number	1	Sequence number of current GSV message
3	Satellites in view	15	Total number of satellites in view (00 ~ 20)
4	Satellite ID	10	01 ~ 32 are for GPS; 33 ~ 64 are for WAAS (PRN minus 87); 193 ~ 197 are for QZSS; 65 ~ 88 are for GLONASS (GL PRN) ; 01 ~ 36 are for GALILEO (GA PRN); 01 ~ 37 are for BDS (BD PRN). GPS, GLONASS, GALILEO and BDS satellites are differentiated by the GNSS system ID in table 3. Maximally 4 satellites are included in each GSV sentence.
5	Elevation	79	Satellite elevation in degrees, (00 ~ 90)
6	Azimuth	250	Satellite azimuth angle in degrees, (000 ~ 359)
7	SNR	50	C/No in dB (00 ~ 99) Null when not tracking
8	GNSS System ID	1	Signal ID*
9	Checksum	67	

*GNSS Signal ID identifies the GNSS signal name according to Table 3.

RMC – Recommended Minimum Specific GNSS Data

Time, date, position, course and speed data provided by a GNSS navigation receiver.

Structure:

$GNRMC,hhmmss.sss,A,dddmm.mmmmm,a,dddmm.mmmmm,a,x.x,x.x,ddmmyy,,,a,a*hh<CR><LF>

1 2 3 4 5 6 7 8 9 10 11 12

Example:

$GNRMC,052315.000,A,2447.09094,N,12100.52369,E,000.0,169.9,261219,,,D,V*0F<CR><LF>

Field	Name	Example	Description
1	UTC time	052315.000	UTC time in hhmmss.sss format (000000.00 ~ 235959.999)
2	Status	A	Status 'V' = Navigation receiver warning 'A' = Data Valid
3	Latitude	2447.09094	Latitude in dddmm.mmmmm format Leading zeros transmitted
4	N/S indicator	N	Latitude hemisphere indicator 'N' = North 'S' = South
5	Longitude	12100.52369	Longitude in dddmm.mmmmm format Leading zeros transmitted
6	E/W Indicator	E	Longitude hemisphere indicator 'E' = East 'W' = West
7	Speed over ground	000.0	Speed over ground in knots (000.0 ~ 999.9)
8	Course over ground	169.9	Course over ground in degrees (000.0 ~ 359.9)
9	UTC Date	261219	UTC date of position fix, ddmmyy format
10	Mode indicator	D	Mode indicator 'A' = Autonomous mode 'D' = Differential mode 'E' = Estimated (dead reckoning) mode 'F' = Float RTK. Satellite system used in RTK mode, floating integers 'M' = Manual Input Mode 'N' = Data not valid 'P' = Precise 'R' = Real Time Kinematic. System used in RTK mode with fixed integers 'S' = Simulator Mode
11	Navigation status		Navigation status indicator according to IEC61108 requirement on 'Navigational (or Failure) warnings and status indicators'. 'S' = Safe 'C' = Caution 'U' = Unsafe 'V' = Navigation status not valid, equipment is not providing navigation status indicator.
12	checksum	0F	

VTG – Course Over Ground and Ground Speed
The actual course and speed relative to the ground.

Structure:
GNVTG,x.x,T,,M,x.x,N,x.x,K,a*hh<CR><LF>
1 2 3 4 5

Example:
$GNVTG,169.9,T,,M,000.0,N,000.0,K,D*11<CR><LF>

Field	Name	Example	Description
1	Course	169.9	True course over ground in degrees (000.0 ~ 359.9)
2	Speed	000.0	Speed over ground in knots (000.0 ~ 999.9)
3	Speed	000.0	Speed over ground in kilometers per hour (000.0 ~ 1800.0)
4	Mode	D	Mode indicator 'A' = Autonomous mode 'D' = Differential mode 'E' = Estimated (dead reckoning) mode 'M' = Manual input mode 'N' = Data not valid 'P' = Precise 'S' = Simulator mode
5	Checksum	11	

ZDA – TIME AND DATE
UTC, day, month, year and local time zone

Structure:
$GNZDA,hhmmss.sss,xx,xx,xxxx,xx,xx*hh<CR><LF>
1 2 3 4 5 6 7

Example:
$GNZDA,052315.000,26,12,2019,00,00*45<CR><LF>

Field	Name	Example	Units	Description
1	UTC time	052315.000		UTC time in hhmmss.sss format (000000.00 ~ 235959.999)
2	UTC Day	26		UTC time: day (01 ~ 31)
3	UTC Month	12		UTC time: month (01 ~ 12)
4	UTC Year	209		UTC time: year (4 digit format)
5	Local zone hour	00		Local zone hours (00 ~ +/- 13)
6	Local zone minutes	00		Local zone minutes (00 ~59)
7	Checksum	45		Checksum

STI,00 – 1 PPS timing report

An output message, id 0x0, contains information of 1 PPS timing mode, 1 PPS survey length and 1PPS quantization error.

Structure:

$PSTI,00,x,xx,xx,x,x.xx *hh<CR><LF>

1 2 3 4 5 6 7

Example:

$PSTI,00,1,1975,3.2,30,0.27*12CR><LF>

Field	Name	Example	Description
1	00	00	Proprietary NMEA message identifier
2	1PPS Timing Mode	1	0 = PVT Mode 1 = Survey Mode 2 = Static Mode
3	1PPS Survey Length	1975	Survey length for Survey Mode values 60 ~ 1209600
4	1PPS Quantization Error	3.2	Quantization error of 1PPS timing values -31 ~ +31
5	Position Standard Deviation Threshold	30	Position standard deviation threshold for comparing self-surveyed position result. At end of self-survey period, if position standard deviation from averaged center point is less than this threshold, static mode is entered; otherwise survey mode is restarted again. Default threshold is 30m. Range is 3~100. Output null field when in PVT mode. If the receiver enters static mode via user input, this field will show default value of 30. Unit: meter
6	Calculated Position Standard Deviation Of Survey Mode	0.27	During survey mode, this field will show the position standard deviation from averaged center point. At end of self-survey period, if this value is less than the Position Standard Deviation Threshold, static mode is entered and this value will be locked to the last calculated value. Null field when in PVT mode. If the receiver enters static via user input, this field will show default value of 0. Unit: meter
7	Checksum	12	

ORDERING INFORMATION

Model Name	Description
PX1100T	L1 Quad GNSS Timing Mode Receiver Module
PX1100T-G	L1 GPS-Only Timing Module, NMEA 3.1 Output Compatible with Venus838LPx-T
PX1100T-GG	L1 GPS/GLONASS Timing Module, NMEA 3.1 Output Compatible with S1216F8-GL-T

Revision History

Revision	Date	Description
1	June 10, 2021	Initial release
2	October 6, 2021	Added PX1100T-GG to Ordering Information

The information provided is believed to be accurate and reliable. These materials are provided to customers and may be used for informational purposes only. No responsibility is assumed for errors or omissions in these materials, or for its use. Changes to specification can occur at any time without notice.

These materials are provides “as is” without warranty of any kind, either expressed or implied, relating to sale and/or use including liability or warranties relating to fitness for a particular purpose, consequential or incidental damages, merchantability, or infringement of any patent, copyright or other intellectual property right. No warrant on the accuracy or completeness of the information, text, graphics or other items contained within these materials. No liability assumed for any special, indirect, incidental, or consequential damages, including without limitation, lost revenues or lost profits, which may result from the use of these materials.

The product is not intended for use in medical, life-support devices, or applications involving potential risk of death, personal injury, or severe property damage in case of failure of the product.